Propagation of ecohydrological uncertainty in a complex biogeochemical network of Glyphosate dispersion and degradation

D. la Cecilia, School of Civil Engineering, Laboratory for Advanced Environmental Engineering Research, The University of Sydney, Sydney 2006, NSW, Australia
G. Porta, Department of Civil and Environmental Engineering, Politecnico di Milano, Milano, Italy
M. Riva, Department of Civil and Environmental Engineering, Politecnico di Milano, Milano, Italy
D. Vervoort, Centre for Carbon, Water and Food, School of Life and Environmental Sciences, The University of Sydney, Sydney 2006, NSW, Australia
N. Coleman, School of Life and Environmental Sciences, The University of Sydney, Sydney 2006, NSW, Australia
F.H. Tang, School of Civil Engineering, Laboratory for Advanced Environmental Engineering Research, The University of Sydney, Sydney 2006, NSW, Australia
F. Maggi, School of Civil Engineering, Laboratory for Advanced Environmental Engineering Research, The University of Sydney, Sydney 2006, NSW, Australia

Key words: Glyphosate biodegradation, ecohydrological uncertainty, global sensitivity analysis

Introduction

Complex biogeochemical systems that include a large number of input parameters suffer from propagation of uncertainty in the calculated model outputs especially when hydraulic, physical and biochemical processes strongly interact. We study the propagation of uncertainty related to hydraulic parameters and ecohydrological fluxes that affect water flow, solute transport, and biogeochemical reactions. We target a complex and recently published biogeochemical reaction network representing the degradation of glyphosate (GLP) herbicide and its byproducts as the case study (see [1]). GLP degradation includes 1 chemical and 3 biological reactions, the latter mediated by 2 microbial functional groups that compete in 3 metabolic and co-metabolic degradation pathways in both aerobic and anaerobic conditions (see Figure 1).

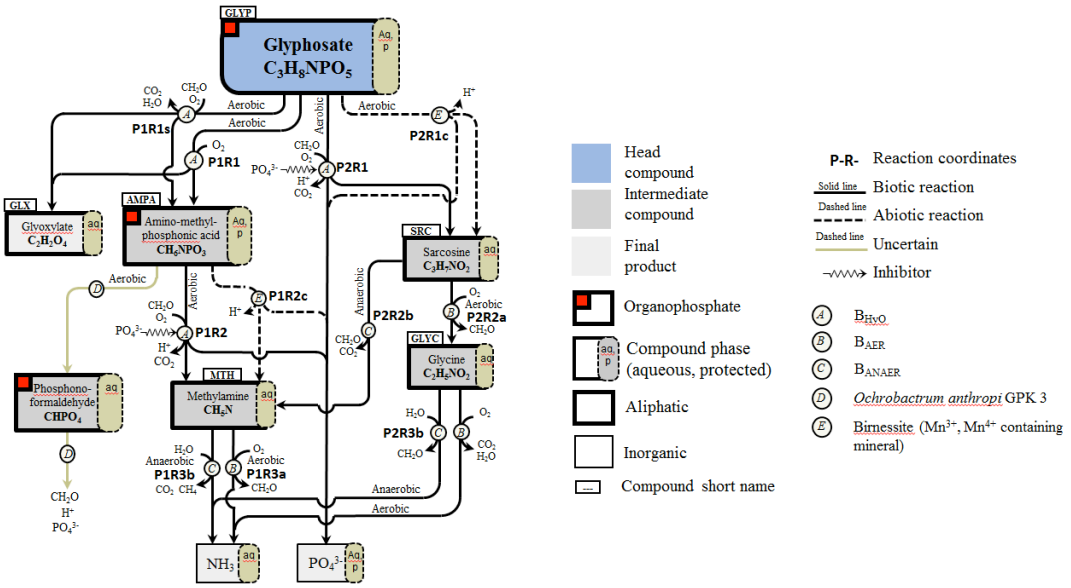

Figure 1: The GLP biodegradation network [1].

Objectives

We show in detail how the uncertainty associated with hydraulic parameters describing water flow in a variably saturated soil profile (i.e., porosity, permeability and water potential-saturation relationship) impact the long-term biogeochemical dynamics and the ecological structure of soil microbial populations in the root zone, as well as the water quality in the aquifer. Propagation of parametric uncertainty targets the probability distributions of GLP, its byproducts, and the microbial biomass. We employ a multiphase and multicomponent solver to carry out the numerical simulations of GLP degradation under the influence of stochastic parameters and boundary conditions. Upon relying on the results of these simulations, we discuss the features of the probability density functions of model predictions. Moreover, we assess the relative importance of the uncertainty related to both ecohydrological fluxes and biogeochemical reactive transport processes, as well as the level of interaction among the different processes, which are a proxy to the level of dynamic coupling within the modeled ecosystem. To achieve these goals, we implement a suite of selected tools of global sensitivity analysis, such as screening techniques and moment-based global sensitivity indices. We frame these analyses in terms of dimensionless parameters describing fluid flow, solute transport, and biogeochemical reactions and we identify global trends and statistical indicators of the attained biogeochemical equilibrium.

Acknowledgment. This research was partly funded by the Sydney Research Excellence Initiative (SREI 2020), and by the Civil Engineering Research Development Scheme (CERDS) 2015, of The University of Sydney. G Porta and M. Riva also acknowledge funding from MIUR (Italian ministry of Education, University and Research, Water JPI, WaterWorks 2014, Project: WE-NEED- Water NEEDs, availability, quality and sustainability).

References

[1] la Cecilia D. and F. Maggi. Analysis of glyphosate degradation in a soil microcosm, *Environmental Pollution* **233**, 201-207, (2017).